Sheepylove Hoof Print Build Doc

Updated: 2026-11-23

It’s woolly, it’s greasey, it’s Sheepylove.

Disclaimer: All trademarks and registered trademarks are the property of their respective owners. The company, product, and service names used in this document are for comparative purposes only. Use of these names, logos, and brands does not imply affiliation nor endorsement.

Sounds like Penny Pedals Fingerprint

Okay, this one got me. I’m not a big fan of slamming 386s, but this is a fun one.

It heavily relies on your guitar impedance, so keep that volume knob up! Once it’s there, there’s a lot of fun.

There, I said fun twice. Now thrice. I’m not sure if this is a mainstay on my board (no fuzz generally is), but it’s a keeper in the collection.

Copyright: Sheepylove.com 2026-11-23

Bill of Materials

Reference	Value	Quantity	Notes
C1,C3,C4	100u	3	
C2	180n	1	
D1	1N5817	1	
D2,D5	LED	2	
D3,D4	1N4148	2	
IC1	NJM386	1	Any 386?
POT1	B10K	1	
POT2	B1K	1	
POT4	B500K	1	
R1	CLR	1	
R2	22	1	
R3	1M5	1	
R4	47K	1	

Copyright: Sheepylove.com 2026-11-23

PCB Images

Top View

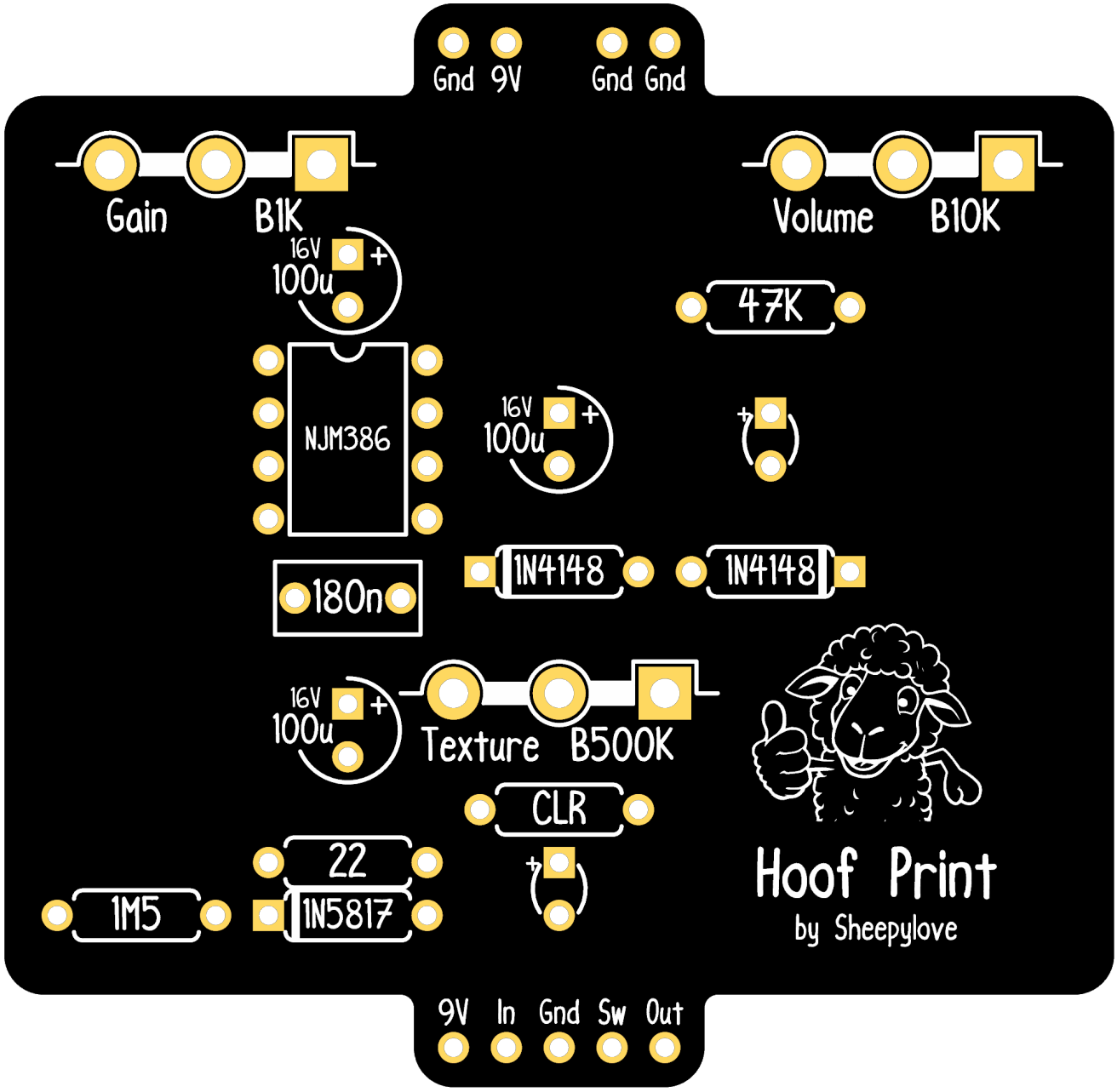

Copyright: Sheepylove.com 2026-11-23

Bottom View

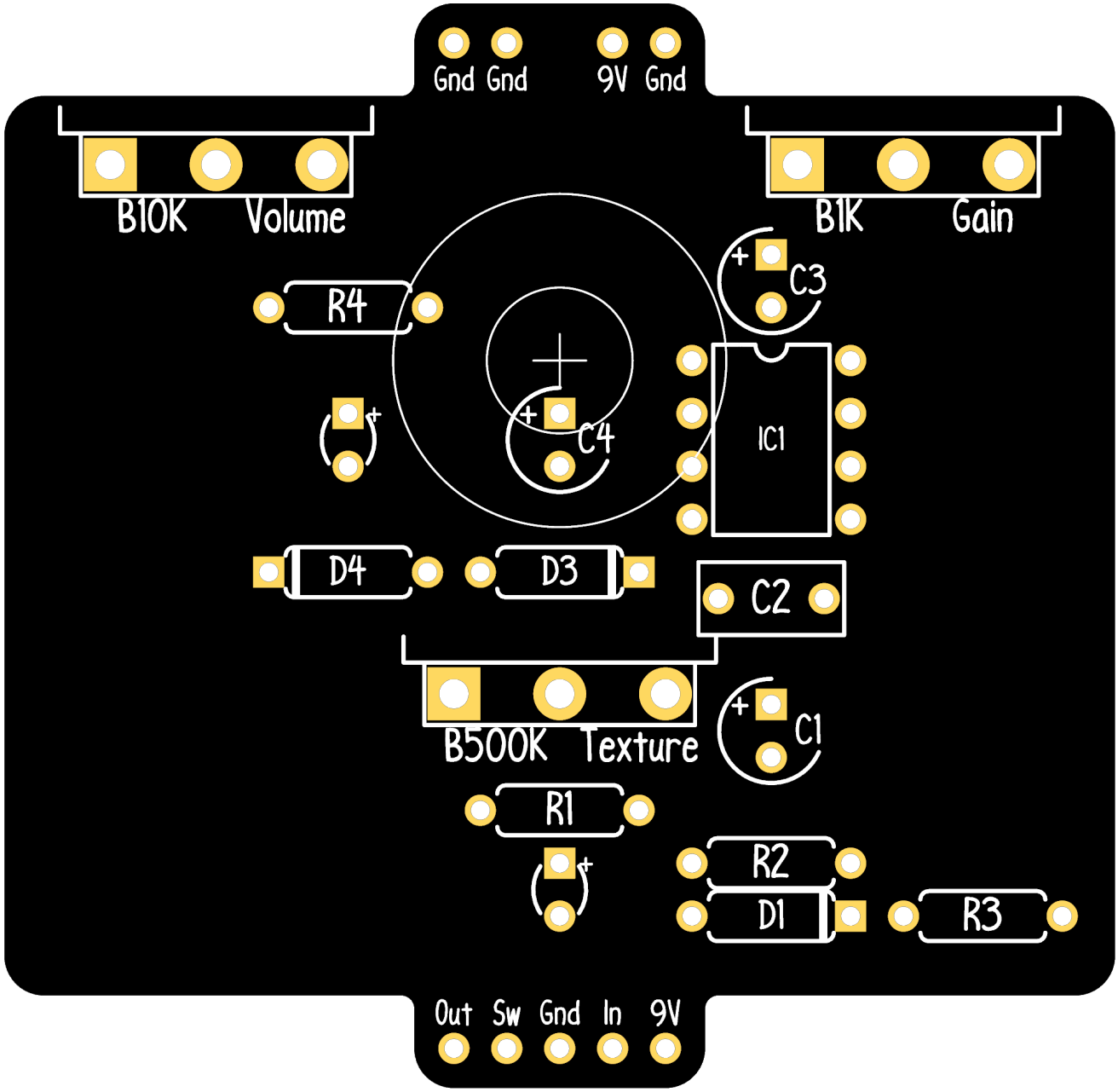

Copyright: Sheepylove.com 2026-11-23

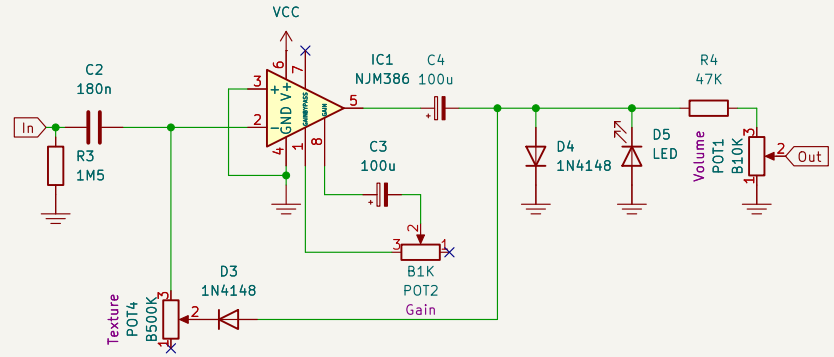

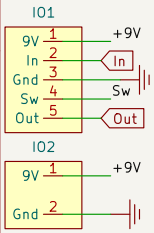

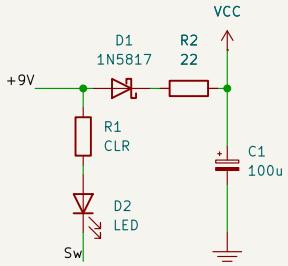

Sheepylove

Sheet: /

File: HoofPrint.kicad_sch

Title:

Size: A4	Date:	**Rev:**
KiCad E.D.A. 10.0.4		Id: 1/1

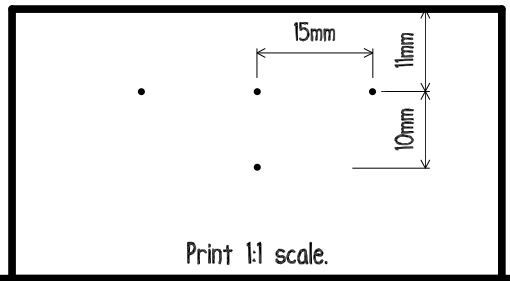

Print 1:1 scale.

Sheepylove Drill Template

-16.5 0 16.5

38.1 • •

12.7 •

0 +

-12.7 • LED



-45.1 • Footswitch

Print 1:1 scale.
All units are in millimeters.