Sheepylove Screwdriver Deluxe Turbo Build Doc

Updated: 2026-03-04

It’s woolly, it’s greasy, it’s Sheepylove.

⚠ **LEGACY BUILD WARNING:** This is a legacy build. The I/O may be different from the standard and the LED may not be onboard or may not be in the place where you expect.

Disclaimer: All trademarks and registered trademarks are the property of their respective owners. The company, product, and service names used in this document are for comparative purposes only. Use of these names, logos, and brands does not imply affiliation nor endorsement.

Sounds like Skreddy Screw Driver Deluxe with mods by Celestial Engineering

Q2 can be any low noise Si transistor. Q1 can be any N-channel JFET with Vp around 3V or so. Not all J112s will have the right Vp. I actually use MMBF4393.

Adjust R6 for 5.5V on Q1-D. Adjust trim to taste (start with 5.3V).

Copyright: Sheepylove.com 2026-03-04

Bill of Materials

Reference	Value	Quantity
Bass	C250k	1
Bias	10k	1
C1, C12	100u	2
C2	100n	1
C3	22n	1
C4	150p	1
C5, C16	1u	2
C6	47u	1
C7	15n	1
C8, C10, C13	220n	3
C9, C18	1n	2
C11	470p	1
C14	10u	1
C15	56n	1
C17	47n	1
D1	1N5817	1
D2		1
Fuzz	C1k	1
IO1		1
IO2		1
IO3		1
IO4		1
IO5		1
Midboost	C10k	1
Q1	J112	1
Q2	BC109C	1
Q3	MP38A	1
Q4	BS170	1
Q5	2N5089	1
R1	CLR	1
R2	10	1
R3	2M2	1
R4, R18	1M	2
R5, R11	56k	2
R6, R10, R16	33k	3
R7	10k	1
R8, R14	1k	2
R9	3k3	1
R12	100k	1
R13	2k7	1
R15	4M7	1

Reference	Value	Quantity
R17	8k2	1
R19	2k2	1
R20	22k	1
R21	27k	1
Treble	B10k	1
Turbo	On/On	1
Volume	A100k	1

Copyright: Sheepylove.com 2026-03-04

PCB Images

Top View

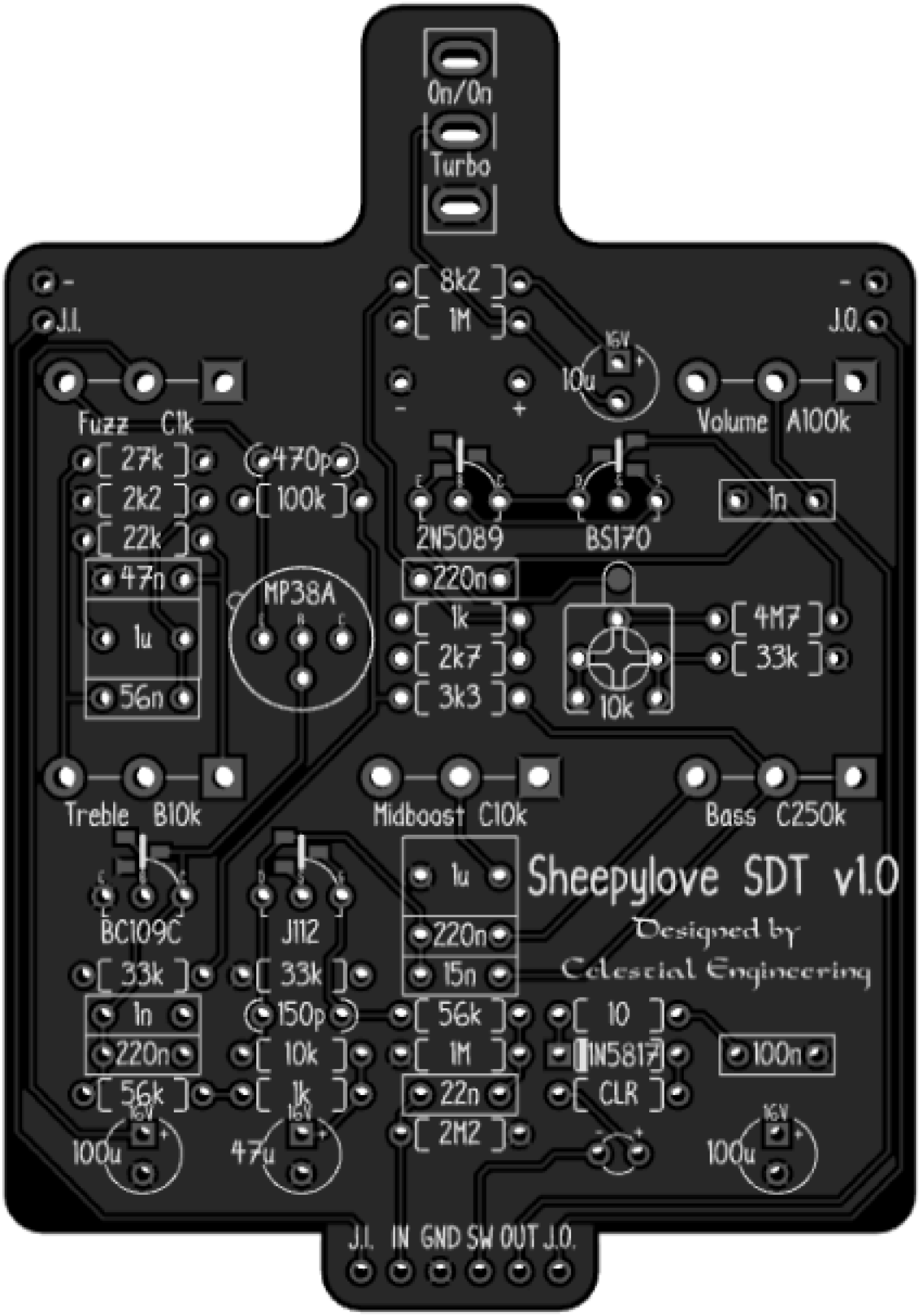

ResDef

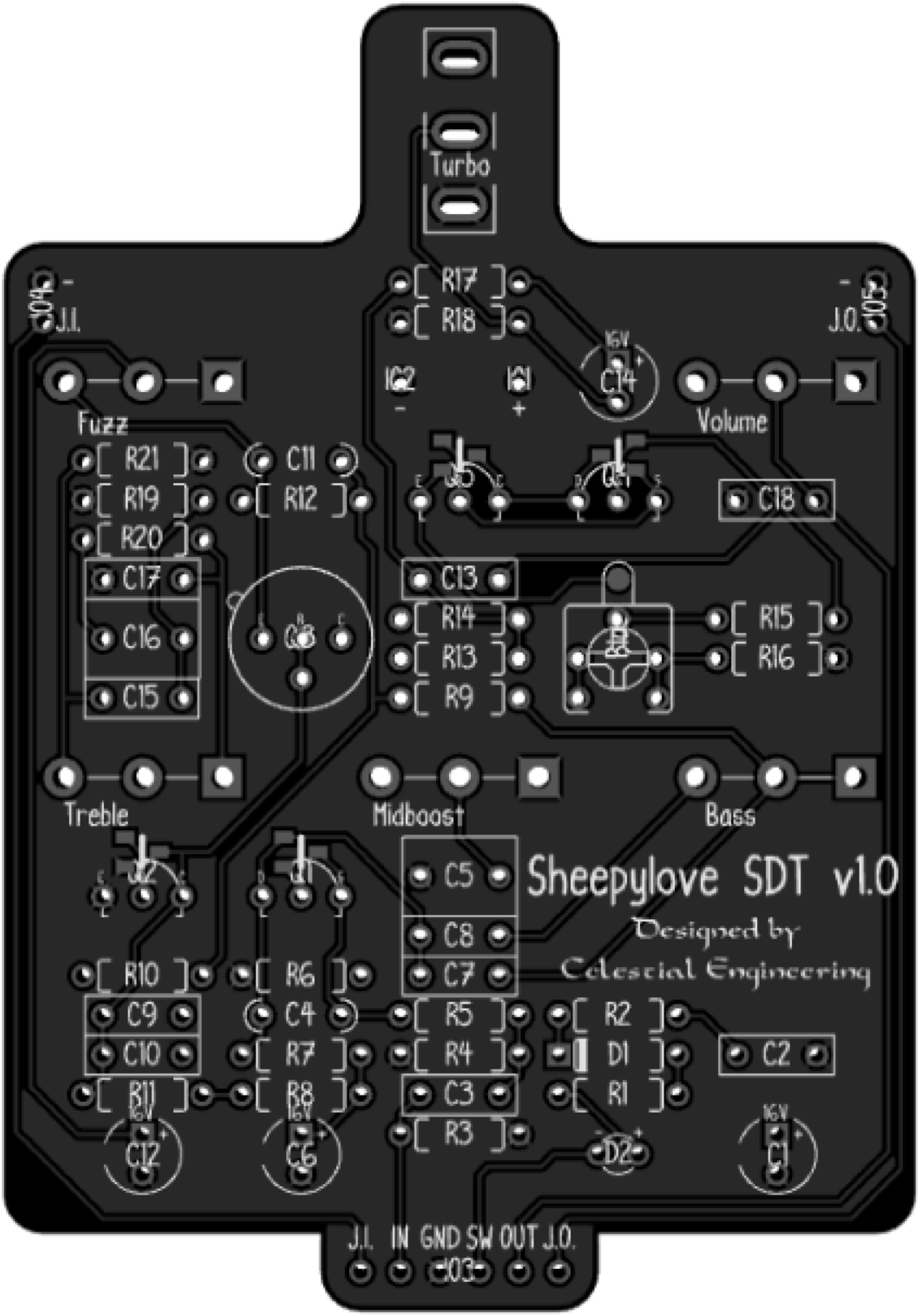
Turbo
J.I.
J.O.
R17
R18
IC2
IC1
C14
16V
Fuzz
Volume
R21
R19
R20
C11
R12
C18
C17
C16
C15
C13
R14
R13
R9
R15
R16
Treble
Midboost
Bass
Sheepylove SDT v1.0
Designed by
Celestial Engineering
C5
C8
C7
R10
R6
C9
C10
C4
R7
R11
R8
R5
R4
C3
R3
R2
D1
R1
C2
C12
C6
D2
C1
J.I. IN GND SW OUT J.O.

Copyright: Sheepylove.com 2026-03-04

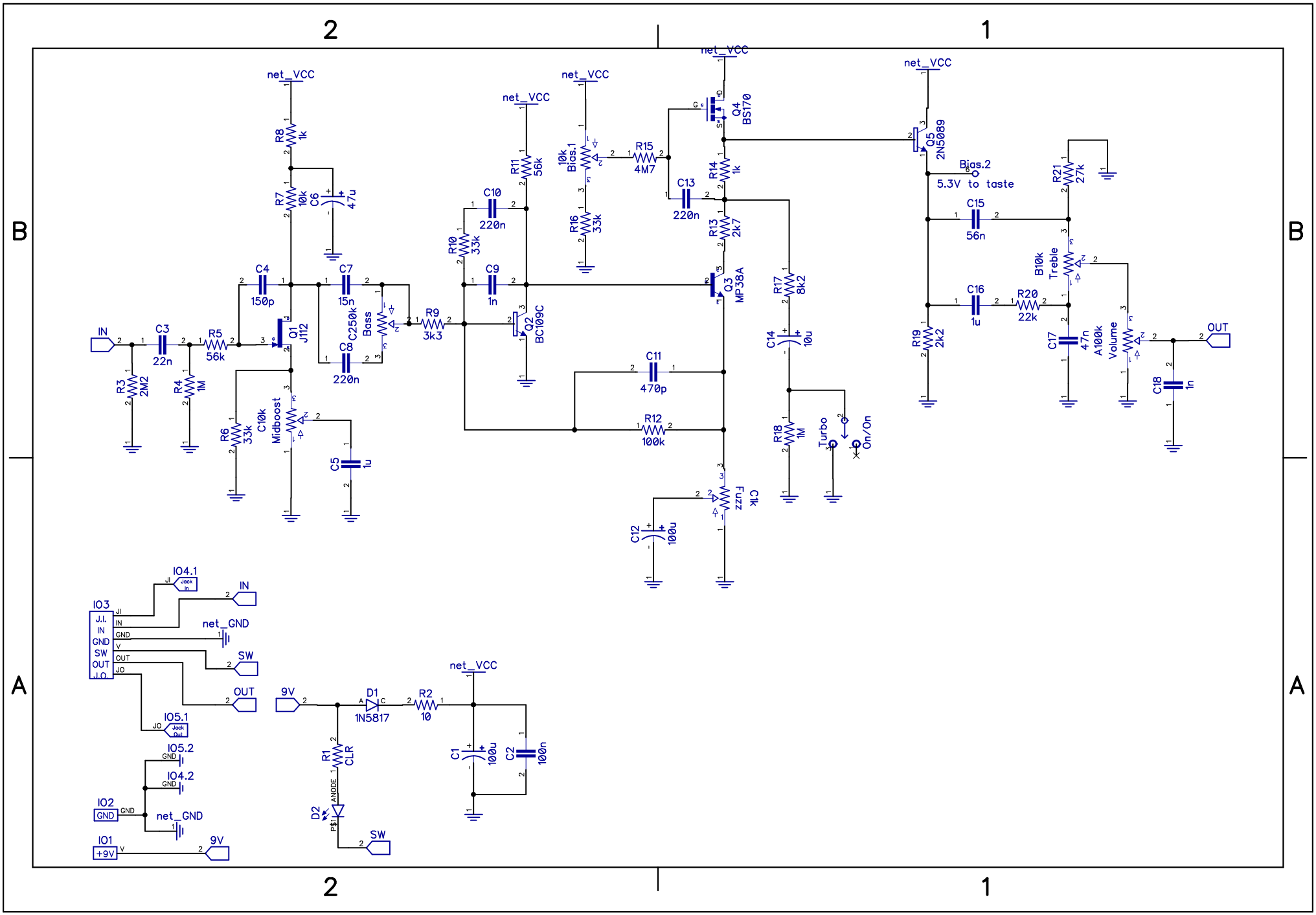

2
1
B
A
net_VCC
R8 1k
R7 10k
C6 47u
C4 150p
C7 15n
C250k Bass
C8 220n
R9 3k3
IN
C3 22n
R5 56k
Q1 J112
R3 2M2
R4 1M
R6 33k
C10k Midboost
C5 1u
C10 220n
R10 33k
C9 1n
R11 56k
Q2 BC109C
net_VCC
10k Bias.1
R15 4M7
R16 33k
C13 220n
R14 1k
R13 2k7
Q4 BS170
Q3 MP38A
C11 470p
R12 100k
C12 100u
C1k Fuzz
R17 8k2
C14 10u
R18 1M
Turbo
On/On
net_VCC
Q5 2N5089
Bias.2
5.3V to taste
C15 56n
C16 1u
R20 22k
R19 2k2
R21 27k
B10k Treble
C17 47n
A100k Volume
C18 1n
OUT
IO4.1
IO3
J.I.
IN
GND
SW
OUT
J.O.
net_GND
IO5.1
IO5.2
IO4.2
IO2
IO1
+9V
9V
D1 1N5817
R2 10
R1 CLR
D2
C1 100u
C2 100n

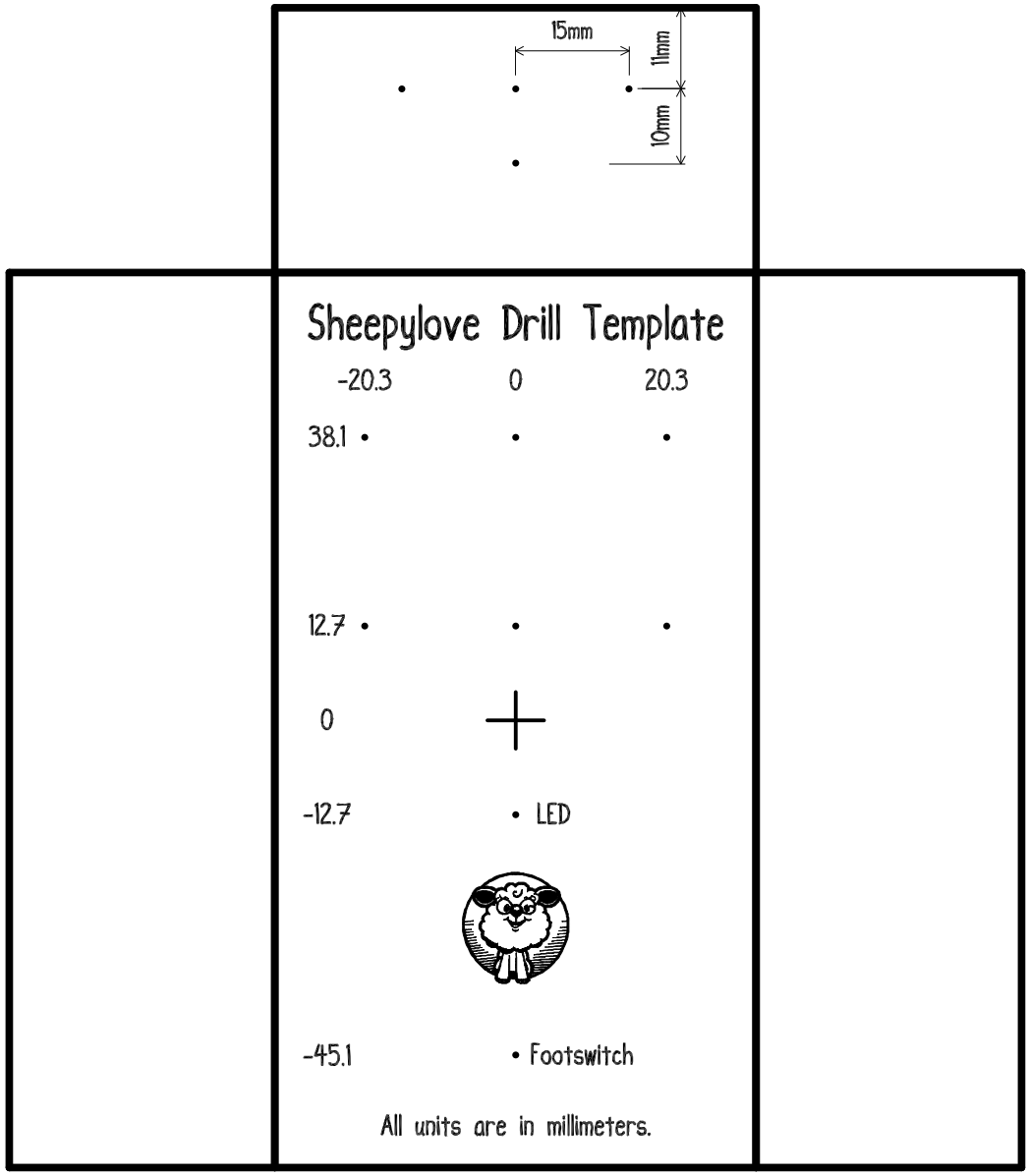
15mm
11mm
10mm
Sheepylove Drill Template
-20.3
0
20.3
38.1
12.7
0
-12.7
LED
-45.1
Footswitch
All units are in millimeters.